QuickStart Guide

FortiAP 241K, 243K

FAP-241K, FAP-243K

The Essentials

Secure your Network

Register at https://support.fortinet.com for the latest threat protection updates

Default Logins

https://192.168.1.2
Username: ***admin***
Password**: leave blank**

https://fortiedge.forticloud.com
Username: ***user-defined***
Password**: *user-defined***

Fortinet Documents Library

For getting started documentation admin guides, up-to-date hardware manuals and reference resources, visit https://docs.fortinet.com/

FortiEdge Cloud

Experience simplified cloud provisioning, zero touch deployment, configuration management and reporting at https://fortiedge.forticloud.com

Package Contents

FortiAP 241K /243K
FAP-241K*, FAP-243K**

QuickStart Guide

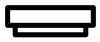
FortiAP Device*

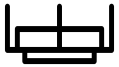
FortiAP
Antenna Device**

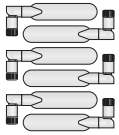
6x Antennas**

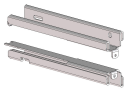
2× 9/16 in. or
15/16 in. T-Rail

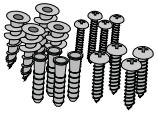
8x Mounting Screws
with 8x Anchors

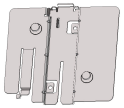
1x Mounting
Bracket

Setup Options

Power the FortiAP device with a PoE injector, FortiGate or FortiSwitch PoE port, or the optional (not included) power adapter.

FortiEdge Cloud

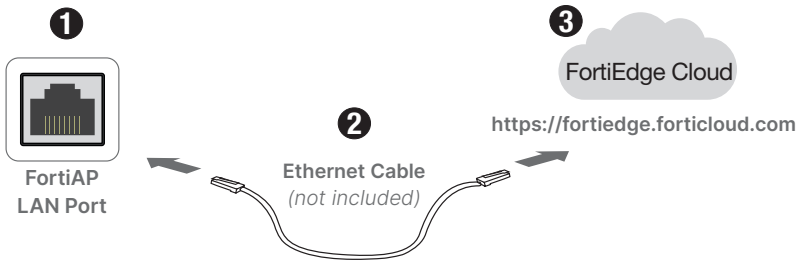

Note: Use your FortiCloud credentials to log in, then click Inventory, Import AP Key and enter the Cloud Key on the device sticker

Direct Connection

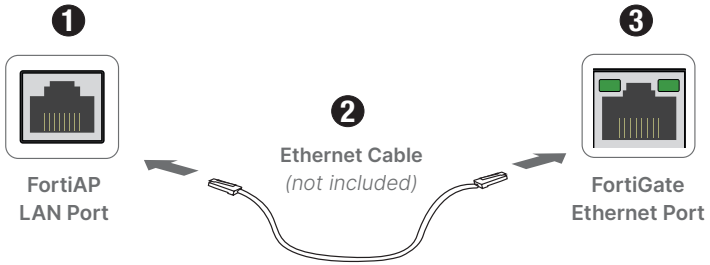

Note: To self-configure, preauthorize the FortiAP on your FortiGate Otherwise once connected, wait for the FortiAP to appear on the Managed FortiAP page in FortiOS.

Network Connection

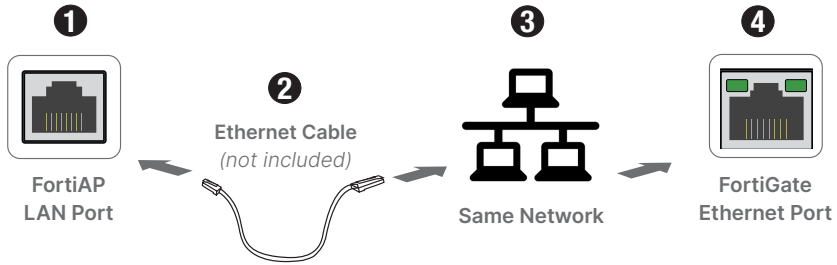

Note: Connect to the FortiAP using 192.168.1.2 with username *admin* and set a password. Specify the FortiGate IP using:

```
cfg -a AC_IPADDR=0.0.0.0
cfg -c
```

where `0.0.0.0` is the FortiGate IP.

T-Bar Mounting

Rail Assembly

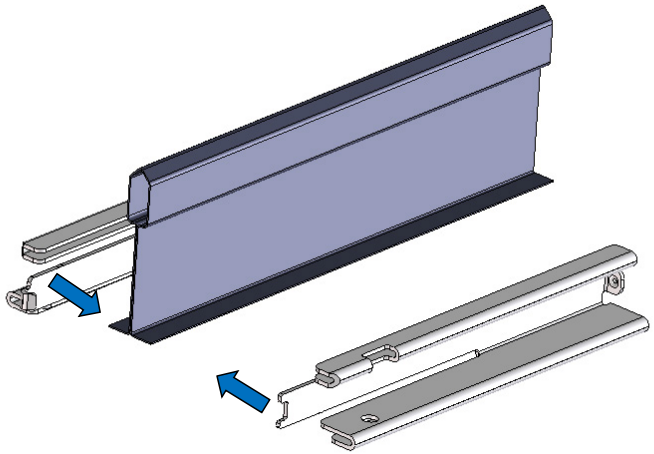

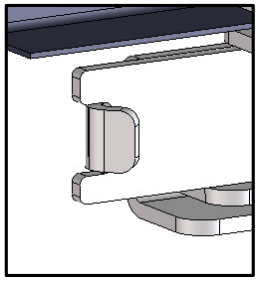

1. Hook

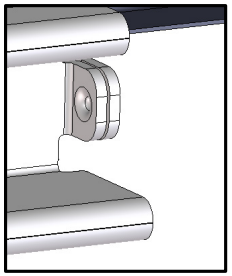

2. Clip

15/16 in. T-Bar

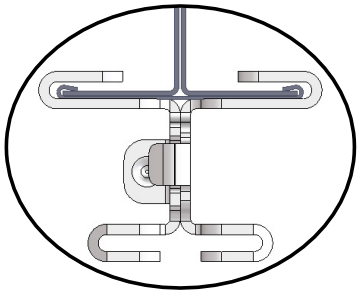

9/16 in. T-Bar

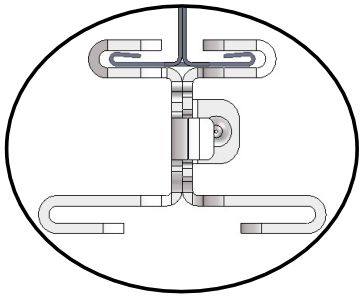

Bracket Installation

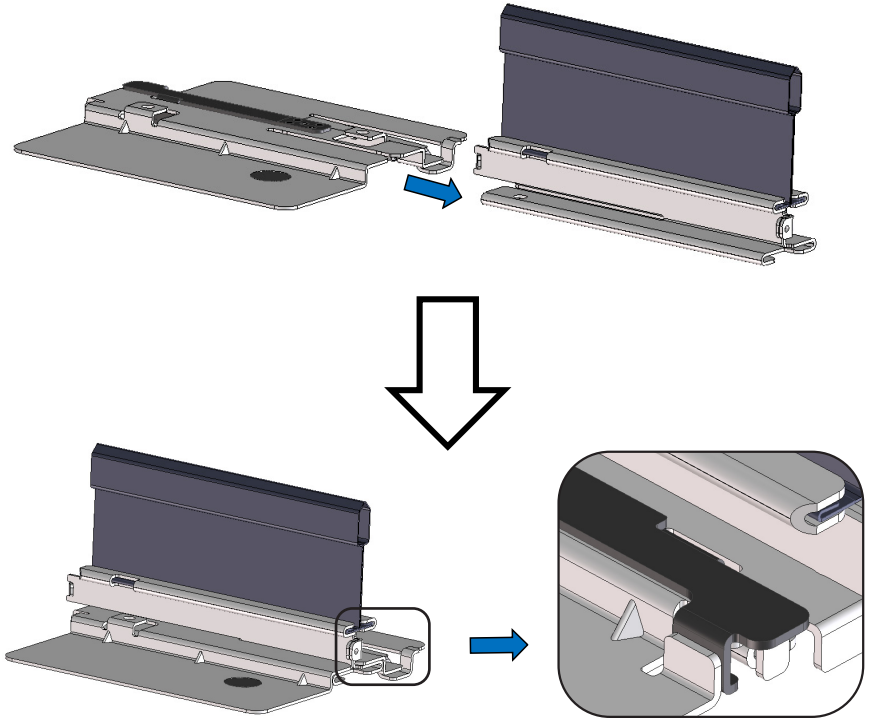

Security Latch

Device Attachment

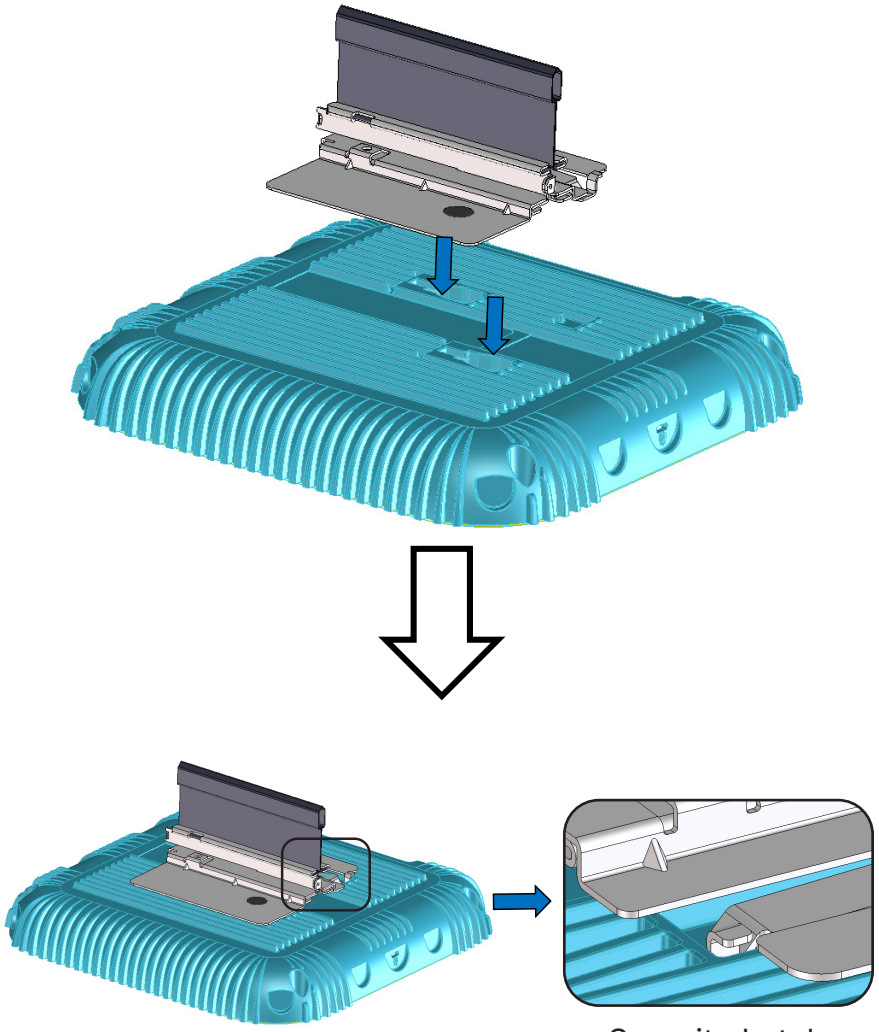

Wall Mounting

Slide Rail Mounting

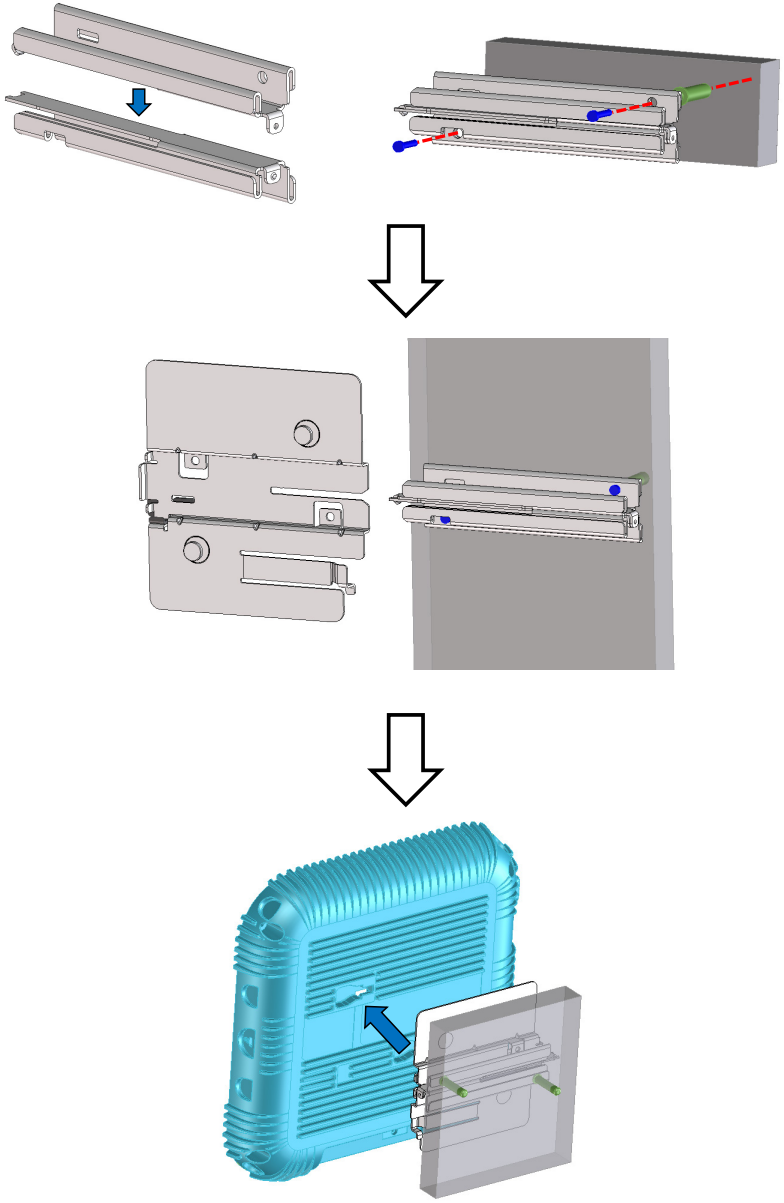

Bracket Mounting

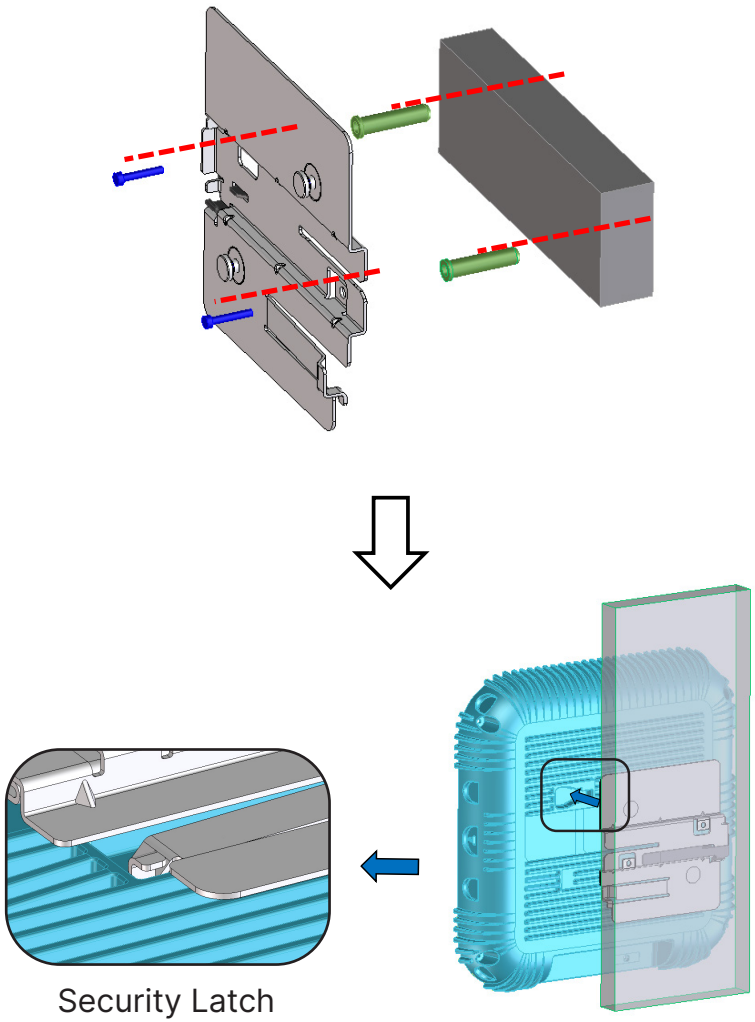

Antenna Installation *(FAP-243K only)*

1. Insert the antenna base firmly into the appropriate antenna mount
2. Securely hand tighten the antenna fastening collar
3. Repeat for the remaining antennas

Note:
Ant 3 and 4 - Radio 1 and Radio 2 Service in 2.4 GHz and 5 GHz band
Ant 2 and 5 - Radio 4 2.4 GHz and 5.0 GHz; 6 GHz Scanning
Ant 1 and 6 - Radio 3 Service in 6.0 GHz band

Interfaces - FAP 241K / 243K

1 LED STATUS

Power

Off: Device is off

Green: Device is on; connected to a controller

Amber: Device is on; not connected to a controller

LAN

Off: LAN is not connected

Green: LAN is connected

Blinking Green: LAN data activity

WiFi

Off: WiFi not broadcasting

Green: SSID broadcasting

Blinking Green: Wireless data activity

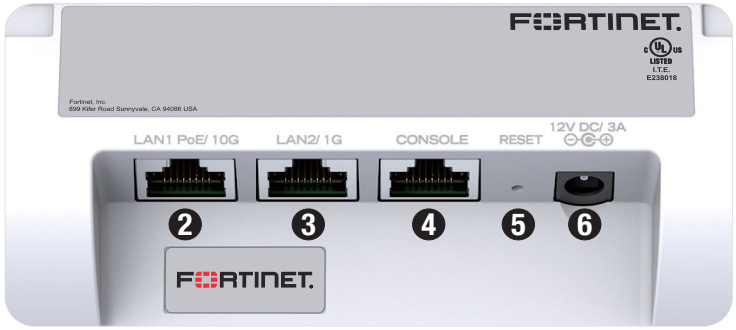

2 LAN1 POE/ 10G (RJ-45) 10 Gbps 802.3bt PoE Ethernet interface

3 LAN2/ 1G (RJ-45) 1 Gbps Ethernet interface

4 CONSOLE (RJ-45) CLI management

5 RESET system reset

6 OPTIONAL POWER (12V DC) Optional 12V DC 3A adapter
SKU: SP-FAP400-PA

Cautions and Warnings

Environmental specifications

Ambient operating temperature: 0°C to 50°C

Refer to specific Product Model Data Sheet for Environmental Specifications (Operating Temperature, Storage Temperature, Humidity, and Altitude)

Référez à la Fiche Technique de ce produit pour les caractéristiques environnementales (Température de fonctionnement, température de stockage, humidité et l'altitude).

Safety

Caution: This equipment is to be used in a Network Environment 0 per IECTR 62101. This product is connected only to PoE networks without routing to the outside plant.
Attention: Ce matériel doit être utilisé dans un Environnement Réseau 0 par IECTR 62101. Ce produit est uniquement connecté aux réseaux PoE sans installation externe de routage.

This product is intended to be supplied by a Listed Direct Plug-In Power Unit marked LPS or Class 2 and rated 12Vdc, 4A or by 55 Vdc from PoE source.
Le produit doit être alimenté par un bloc d'alimentation à courant continu homologué UL de 12Vdc, 4A nominal marqué LPS ou Class 2 ou par une source d'alimentation par Ethernet de 54 Vdc (PoE).

Regulatory Notices

Federal Communication Commission (FCC) – USA

This device complies with Part 15 of the FCC Rules. Operation is subject to the following two conditions:
(1) this device may not cause harmful interference, and
(2) this device must accept any interference received; including interference that may cause undesired operation.

This equipment has been tested and found to comply with the limits for a Class B digital device, pursuant to Part 15 of the FCC Rules. These limits are designed to provide reasonable protection against harmful interference in residential installation. This equipment generates, uses, and can radiate radio frequency energy, and if it is not installed and used in accordance with the instruction manual, it may cause harmful interference to radio communications. However, there is no guarantee that interference will not occur in a particular installation.
If this equipment does cause harmful interference to radio or television reception, which can be determined by turning the equipment off and on, the user is encouraged to try to correct the interference by one or more of the following measures:

Reorient or relocate the receiving antenna.
Increase the separation between the equipment and receiver.
Connect the equipment into an outlet on a circuit different from that to which the receiver is connected. Consult the dealer or an experienced radio/TV technician for help.

WARNING: Any changes or modifications to this unit not expressly approved by the party responsible for compliance could void the user's authority to operate the equipment

This equipment complies with FCC radiation exposure limits set forth for an uncontrolled environment.

For FAP-241K
This equipment should be installed and operated with minimum distance 45 cm between the radiator and your body. This transmitter must not be co-located or operating in conjunction with any other antenna or transmitter.

For FAP-243K
This equipment should be installed and operated with minimum distance 40 cm between the radiator and your body. This transmitter must not be co-located or operating in conjunction with any other antenna or transmitter.

This device meets all the other requirements specified in Part 15E, Section 15.407 of the FCC Rules.

FCC regulations restrict the operation of this device to indoor use only.

For FAP-241K
For 6ID (Indoor Access Point) and UNII-4 (Indoor AP)
a. FCC regulations restrict the operation of this device to indoor use only.
b. The operation of this device is prohibited on oil platforms, cars, trains, boats, and aircraft, except that operation of this device is permitted in large aircraft while flying above 10,000 feet.
c. Operation of transmitters in the 5.925-7.125 GHz band is prohibited for control of or communications with unmanned aircraft systems.

FAP-241K and FAP-243K
For 6SD, the operation of this device is prohibited on oil platforms, cars, trains, boats, and aircraft.
Operation of transmitters in the 5.925-7.125 GHz band is prohibited for control of or communications with unmanned aircraft systems.

Innovation, Science and Economic Development (ISED) – Canada

This Class B digital apparatus complies with Canadian ICES-003.
Cet appareil numérique de la classe B est conforme à la norme NMB-003 du Canada.

This device contains licence-exempt transmitter(s)/receiver(s) that comply with Innovation, Science and Economic Development Canada's licence-exempt RSS(s). Operation is subject to the following two conditions:

1.This device may not cause interference.
2.This device must accept any interference, including interference that may cause undesired operation of the device.

L'émetteur/récepteur exempt de licence contenu dans le présent appareil est conforme aux CNR d'Innovation, Sciences et Développement économique Canada applicables aux appareils radio exempts de licence. L'exploitation est autorisée aux deux conditions suivantes:

1.L'appareil ne doit pas produire de brouillage;
2.L'appareil doit accepter tout brouillage radioélectrique subi, même si le brouillage est susceptible d'en compromettre le fonctionnement.

For product available in the USA/Canada market, only channel 1~11 can be operated. Selection of other channels is not possible.
Pour les produits disponibles aux États-Unis / Canada du marché, seul le canal 1 à 11 peuvent être exploités. Sélection d'autres canaux n'est pas possible.

Devices shall not be used for control of or communications with unmanned aircraft systems.
Les dispositifs ne doivent pas être utilisés pour commander des systèmes d'aéronef sans pilote ni pour communiquer avec de tels systèmes.

Operation shall be limited to indoor use only.
Leur utilisation doit être limitée à l'intérieur seulement.

FAP-241K for Low-power indoor
Devices shall not be used for control of or communications with unmanned aircraft systems.
Les dispositifs ne doivent pas être utilisés pour commander des systèmes d'aéronef sans pilote ni pour communiquer avec de tels systèmes.

Operation shall be limited to indoor use only.
Leur utilisation doit être limitée à l'intérieur seulement.

Operation on oil platforms, automobiles, trains, maritime vessels and aircraft shall be prohibited except for on large aircraft flying above 3048 m (10,000 ft).
Leur utilisation à bord de plateformes de forage pétrolier, d'automobiles, de trains, de navires maritimes et d'aéronefs doit être interdite, sauf à bord d'un gros aéronef volant à plus de 3048 m (10 000 pi) d'altitude.

FAP-241K and FAP-243K for Standard-power
Devices shall not be used for control of or communications with unmanned aircraft systems.
Operation on oil platforms, automobiles, trains, maritime vessels and aircraft shall be prohibited.
Information for antenna type(s), antenna models(s), and worst-case tilt angle(s) necessary to remain compliant with the E.I.R.P. elevation mask requirement set forth in section 4.5.4.c shall be clearly indicated.
The antenna height shall be determined by the installer or operator of the standard-power access point or fixed client device, or by automatic means. This information shall be stored internally in the device. Provision of accurate device information is mandatory.

Les dispositifs ne doivent pas être utilisés pour commander des systèmes d'aéronef sans pilote ni pour communiquer avec de tels systèmes.
leur utilisation à bord de plateformes de forage pétrolier, d'automobiles, de trains, de navires maritimes et d'aéronefs doit être interdite;
le ou les types d'antennes, le ou les modèles d'antennes et le ou les

pires angles d'inclinaison nécessaires pour rester conforme à l'exigence de la section 4.5.4(c) sur le masque de P.I.R.E. par rapport à l'angle de site doivent être clairement indiqués.
La hauteur de l'antenne doit être déterminée par l'installateur ou l'opérateur du point d'accès de puissance normale ou du dispositif client fixe, ou par des dispositifs automatiques. Cette information doit être enregistrée dans le dispositif. La fourniture d'information précise sur le dispositif est obligatoire.

For FAP-241K
This equipment complies with ISED radiation exposure limits set forth for an uncontrolled environment. This equipment should be installed and operated with minimum distance 27 cm between the radiator and your body.

Cet équipement est conforme aux limites d'exposition aux rayonnements ISED établies pour un environnement non contrôlé. Cet équipement doit être installé et utilisé avec un minimum de 27 cm de distance entre la source de rayonnement et votre corps.

For FAP-243K
This equipment complies with ISED radiation exposure limits set forth for an uncontrolled environment. This equipment should be installed and operated with minimum distance 23 cm between the radiator and your body.

Cet équipement est conforme aux limites d'exposition aux rayonnements ISED établies pour un environnement non contrôlé. Cet équipement doit être installé et utilisé avec un minimum de 23 cm de distance entre la source de rayonnement et votre corps.

Caution: The device for the band 5150-5250 MHz is only for indoor usage to reduce potential for harmful interference to co-channel mobile satellite systems.

Attention: Le dispositif de la bande 5150-5250 MHz est réservé à un usage intérieur afin de réduire l'interférence nuisible potentielle aux systèmes mobiles par satellite co-canal.

Caution: The maximum antenna gain permitted for devices in the bands 5250-5350 MHz and 5470-5725 MHz shall comply with the e.i.r.p. limit; and the maximum antenna gain permitted for devices in the band 5725-5825 MHz shall comply with the e.i.r.p. limits specified for point-to-point and non point-to-point operation as appropriate.

Attention: Le gain maximal d'antenne permis pour les dispositifs utilisant les bandes 5 250-5 350 MHz et 5 470-5 725 MHz doit se conformer à la limite de p.i.r.e.; le gain maximal d'antenne permis (pour les dispositifs utilisant la bande 5 725-5 825 MHz) doit se conformer à la limite de p.i.r.e. spécifiée pour l'exploitation point à point et non point à point, selon le cas.

Under ISED regulations, this radio transmitter may only operate using an antenna of a type and maximum (or lesser) gain approved for the transmitter by ISED. To reduce potential radio interference to other users, the antenna type and its gain should be so chosen that the equivalent isotopically radiated power (e.i.r.p.) is not more than that necessary for successful communication.

Conformément à la réglementation d'ISED, cet émetteur radio peut fonctionner seulement avec une antenne d'un type et d'un gain maximal (ou inférieur) approuvé pour l'émetteur par ISED. Dans le but de réduire les risques de brouillage radioélectrique aux autres utilisateurs, il faut choisir le type d'antenne et son gain de sorte que la puissance isotrope rayonnée équivalente (p.i.r.e.) ne dépasse pas l'intensité nécessaire à l'établissement d'une communication réussie.

This radio transmitter ***IC: 7280B-240602*** has been approved by ISED to operate with the antenna types listed below with the maximum permissible gain and required antenna impedance for each antenna type indicated. Antenna types not included in this list, having a gain greater than the maximum gain indicated for that type, are strictly prohibited for use with this device.

Le présent émetteur radio ***IC: 7280B-240602*** a été approuvé par ISED pour fonctionner avec les types d'antenne énumérés ci-dessous et ayant un gain admissible maximal et l'impédance requise pour chaque type d'antenne. Les types d'antenne non inclus dans cette liste, ou dont le gain est supérieur au gain maximal indiqué, sont strictement interdits pour l'exploitation de l'émetteur.

This device and it's antennas(s) must not be co-located or operating in conjunction with any other antenna or transmitter except in accordance with IC multi-transmitter product procedures.

Cet appareil et son antenne (s) ne doit pas être co-localisés ou fonctionnement en association avec une autre antenne ou transmetteur.

FAP-241K				
Antenna Number	Antenna Type	Connector	Support	Max Peak Gain
Antenna 1	PIFA	IPEX	2.4G+5G+UNII-4	2.4G: 5.11 5G: 5.22
Antenna 2	PIFA	IPEX	2.4G+5G+UNII-4	2.4G: 5.19 5G: 5.32
Antenna 3	PIFA	IPEX	2.4G+5G+UNII-4+6G	2.4G: 4.97 5G: 5.35 6G: 5.48
Antenna 4	PIFA	IPEX	2.4G+5G+UNII-4+6G	2.4G: 4.69 5G: 5.43 6G: 5.37
Antenna 5	Alford Loop	IPEX	6G	6G: 5.53
Antenna 6	Alford Loop	IPEX	6G	6G: 5.58
Antenna 7	Dipole	IPEX	BT+Zigbee	BT+Zigbee: 5

FAP-243K				
Antenna Number	Antenna Type	Connector	Support	Max Peak Gain
A3 (Antenna 1)	Dipole	Reverse SMA	2.4G+5G	2.4G: 3.53 5G: 5.51
A4 (Antenna 2)	Dipole	Reverse SMA	2.4G+5G	2.4G: 3.40 5G: 5.34
A2 (Antenna 3)	Dipole	Reverse SMA	2.4G+5G+6G	2.4G: 3.27 5G: 5.21 6G: 5.32
A5 (Antenna 4)	Dipole	Reverse SMA	2.4G+5G+6G	2.4G: 3.47 5G: 5.05 6G: 5.10
A1 (Antenna 5)	Dipole	Reverse SMA	6G	6G: 5.20
A6 (Antenna 6)	Dipole	Reverse SMA	6G	6G: 5.03
BLE (Antenna 7)	PIFA	IPEX	BT+Zigbee	BT+Zigbee: 4.82

European Conformity (CE) – EU

This is a Class B product. In a domestic environment, this product may cause radio interference, in which case the user may be required to take adequate measures.

This equipment should be installed and operated with minimum distance 20cm between the radiator and your body.

Simplified EU Declaration of Conformity

This declaration is only valid for Fortinet products (including, combinations of software, firmware and hardware) provided by Fortinet or Fortinet's authorized partners to the end customer directly for use within the EU or countries that have implemented the EU Directives and/or spectrum regulation. Any Fortinet products not obtained directly from Fortinet or Fortinet's authorized partners may not comply with EU Directives and Fortinet makes no assurances for such products.

Български
Този продукт е в съответствие с Директива 2014/53/ЕС.

Česky
Tento produkt je v souladu se směrnicí 2014/53/EU.

Dansk
Dette produkt er i overensstemmelse med direktiv 2014/53/EU.

Deutsch
Dieses Produkt entspricht der Richtlinie 2014/53/EU.

Eesti
See toode vastab direktiivile 2014/53/EL.

English
This product is in compliance with Directive 2014/53/EU.

Español
Este producto cumple con la Directiva 2014/53/UE.

Ελληνική
Το προϊόν αυτό συμμορφώνεται με την Οδηγία 2014/53/ΕΕ.

Français
Ce produit est conforme à la Directive 2014/53/UE.

Hrvatski
Ovaj proizvod je u skladu s Direktivom 2014/53/EU.

Italiano
Questo prodotto è conforme alla Direttiva 2014/53/EU.

Latviski
Šis produkts atbilst Direktīvai 2014/53/EU.

Lietuvių
Šis gaminys atitinka direktyvą 2014/53/ES.

Malti
Dan il-prodott huwa konformi mad-Direttiva 2014/53/UE.

Magyar
Ez za termék megfelel a 2014/53/EU irányelvnek.

Nederlands
Dit product is in overeenstemming met Richtlijn 2014/53/EU.

Norsk
Dette produktet er i samsvar med direktiv 2014/53/EU.

Polski
Ten produkt jest zgodny z dyrektywą 2014/53/UE.

Português
Este produto está em conformidade com a Diretiva 2014/53/UE.

Rumunski
Acest produs este în conformitate cu Directiva 2014/53/UE.

Slovensky
Tento produkt je v súlade so smernicou 2014/53/EÚ.

Slovensko
Ta izdelek je v skladu z Direktivo 2014/53/EU.

Suomi
Tämä tuote on direktiivin 2014/53/EU mukainen.

Svenska
Denna produkt överensstämmer med direktiv 2014/53/EU.

Note: The full declaration of conformity for this product is available at the link below:
https://site.fortinet.com/ProductRegulatory/EU

The device is restricted to indoor use only when operating in the 5150-5350 MHz and 5945MHz-6425MHz frequency ranges in the following countries:

	AT	BE	BG	HR	CY	CZ	DK
	EE	FI	FR	DE	EL	HU	IE
	IT	LV	LT	LU	MT	NL	PL
	PT	RO	SK	SI	ES	SE	

	UK (NI)

Compliance with 2014/53/EU Radio Equipment Directive (RED)

In accordance with Article 3.1(a) , 3.1(b) , 3.2of the RED, the following table provides information on the frequency bands used and the maximum RF transmit power of the product for sale in the EU:

Frequency Range (MHz)	Max. Transmit Power (dBm)
Bluetooth: 2402-2480MHz	10
Zigbee: 2405-2480MHz	10
WLAN 2.4GHz: 2412-2472MHz	20
WLAN 5GHz: 5180-5320MHz	23
WLAN 5GHz: 5500-5700MHz	30
WLAN 5GHz: 5725-5875MHz	14
WLAN 6GHz: 5955-6415MHz	23

UK Conformity Assessed (UKCA) – United Kingdom

The product transmits within the frequency ranges and less than or equal to the power listed below:

Frequency Range (MHz)	Max. Transmit Power (dBm)
Bluetooth: 2402-2480MHz	10
Zigbee: 2405-2480MHz	10
WLAN 2.4GHz: 2412-2472MHz	20
WLAN 5GHz: 5180-5320MHz	23
WLAN 5GHz: 5500-5700MHz	30
WLAN 5GHz: 5725-5875MHz	14
WLAN 6GHz: 5955-6415MHz	23

This equipment should be installed and operated with minimum distance 20 cm between the radiator and your body.

This product is in compliance with **Statutory Instrument 1206 Radio Equipment Regulations 2017**

The full Declaration of Conformity for this product is available in the link below:
https://site.fortinet.com/ProductRegulatory/UK

National Telecommunications Commission (NCC) – Taiwan

取得審驗證明之低功率射頻器材，非經核准，公司、商號或使 用者均不得擅自變更頻率、加大功率或變更原設計之特性及功能。低功率射頻器材之使用不得影響飛航安全及干擾合法通信；經發現有干擾現象時，應立即停用，並改善至無干擾時方得繼續使用。前述合法通信，指依電信管理 法規定作業之無線電通信。低功率射頻器材須忍受合法通信或工業、科學及醫療用電波輻射性電機設備之干擾。

本器材須經專業工程人員安裝及設定，始得設置使用，且不得直接販售給一般消費者。

無線資訊傳輸設備避免影響附近雷達系統之操作。

Agência Nacional de Telecomunicações (ANATEL) – Brazil

Este equipamento não tem direito à proteção contra interferência prejudicial e não pode causar interferência em sistemas devidamente autorizados. www.gov.br/anatel

O modelo FAP-243K será comercializado no Brasil com a faixa de WiFi 6GHz (5925 MHz a 7125 MHz) bloqueada via software.

Voluntary Control Council for Interference (VCCI) – Japan

この装置は、クラスＢ機器です。この装置は、住宅環境で使用することを目的としていますが、この装置がラジオやテレビジョン受信機に近接して使用されると、受信障害を引き起こすことがあります。
取扱説明書に従って正しい取り扱いをして下さい。
ＶＣＣＩ－Ｂ

November 14, 2025

Copyright © 2025 Fortinet, Inc. All rights reserved. Fortinet®, FortiGate®, FortiCare® and FortiGuard®, and certain other marks are registered trademarks of Fortinet, Inc., and other Fortinet names herein may also be registered and/or common law trademarks of Fortinet. All other product or company names may be trademarks of their respective owners. Performance and other metrics contained herein were attained in internal lab tests under ideal conditions, and actual performance and other results may vary. Network variables, different network environments and other conditions may affect performance results. Nothing herein represents any binding commitment by Fortinet, and Fortinet disclaims all warranties, whether express or implied, except to the extent Fortinet enters a binding written contract, signed by Fortinet's Chief Legal Officer, with a purchaser that expressly warrants that the identified product will perform according to certain expressly-identified performance metrics and, in such event, only the specific performance metrics expressly identified in such binding written contract shall be binding on Fortinet. For absolute clarity, any such warranty will be limited to performance in the same ideal conditions as in Fortinet's internal lab tests. Fortinet disclaims in full any covenants, representations, and guarantees pursuant hereto, whether express or implied. Fortinet reserves the right to change, modify, transfer, or otherwise revise this publication without notice, and the most current version of the publication shall be applicable.

For Product License Agreement / EULA and Warranty Terms, visit https://www.fortinet.com/content/dam/fortinet/assets/legal/EULA.pdf

FAP-241K-243K-QSG-20251114

MIX
Paper
FSC® C198707